MDA

Basic units range

CRE TECHNOLOGY offers 3 basic microprocessor modules 72 x 72 for generator control. These modules display all information on leds and 10A relay outputs.

MDA is a basic microprocessor controlled unit designed to start and stop the genset automatically on request of an external Remote Start signal.

CE EAC

PART NUMBER

A6OY1

KEY FEATURES

A SIMPLE PRODUCT FOR BASIC APPLICATIONS

- When the engine is running, the unit monitors fault conditions and shuts down the engine automatically if an alarm occurs. The alarms are identified by LEDs. On an OFF position, the module is de-energized and the remote start is disabled with no current consumption. The unit uses high current two part connectors for easy replacement.

ENERGIZE TO STOP CONTROL

- The **MDA** is also able to control 'Energize to Stop' engines. When the 'Energize to Stop' option is selected, the auxiliary relay output will be energized during the stop timer and the LED associated with this condition will be switched on. The selection of engine type is made by a jumper switch.

COMPATIBILITY

- The unit is able to operate with both 50 and 60 Hz systems. The selection is made with a jumper switch.

RELIABLE AND EASY TO USE

- The **MDA** is dedicated to basic applications which need no extra costs or expensive hardware. The **MDA** has passed EMC and low voltage tests, and all units are 100% tested before delivery.

OPTIONS

- Preheat with activate to start and energize to stop without preheat.

APPLICATIONS

Basic units are easy to use and made for small genset refit or manual backup system, there is no PC requires for settings.

CRE TECHNOLOGY - 130, Allée Charles-Victor Naudin - Zone des Templiers - SOPHIA ANTIPOLIS - 06410 BIOT - FRANCE
Téléphone : + 33 (0)4.92.38.86.82 - www.cretechnology.com - info@cretechnology.com

WIRING DIAGRAM

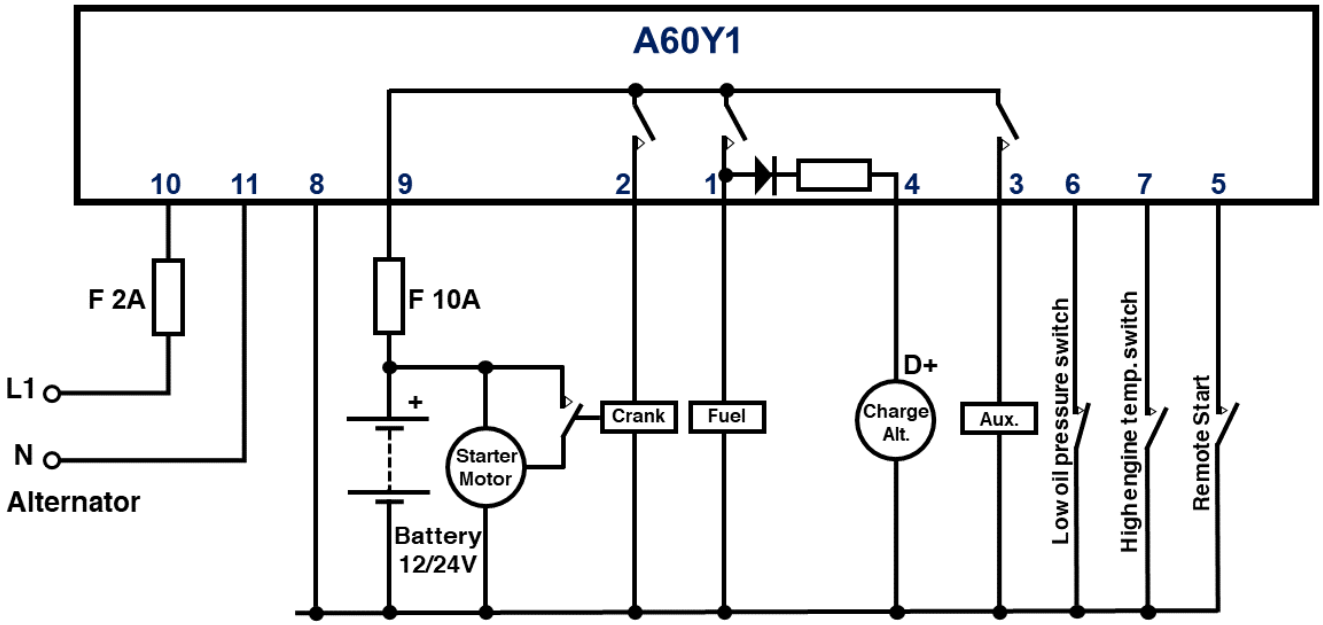

CERTIFICATIONS

CERTIFICATIONS
EMC
Low Voltage

MDA

Basic units range

SPECIFICATIONS

CURRENT, VOLTAGE AND FREQUENCY	
Alternator voltage	15 to 300 VAC
Alternator frequency	50 or 60 Hz nominal
Overspeed	Nominal frequency + 14% (+24% overshoot)
DC Supply Range	8 to 33 VDC
Current consumption	80mA max. (Outputs open)
Charge fail threshold	6 VDC
Charge excitation current	Via 82 Ω resistor connected to the FUEL output
INPUTS, OUTPUTS	
DC supply	12 or 24 VDC, (+) and (-) terminals
L1	Generator phase voltage
Neutral	Generator neutral terminal
High temp switch/ Low oil pressure	Negative closing switch input
Remote start	A negative supply connected to this input will run the engine
Charge	Connect the charge alternator's D+ output to this terminal. This terminal will supply the excita-tion current and measure the voltage of the charge alternator
Output	Fuel solenoid: 10A@28VDC / Start: 10A@28VDC / Auxiliary: 10A@28VDC
ENVIRONMENT	
Operating temperature	-20°C (-4°F) to 70 °C (158°F)
Storage temperature	-30°C (-22°F) to 80 °C (176°F)
Maximum humidity	95% non-condensing
SIZE AND WEIGHT	
Dimensions	72x72x38mm (WxHxD)
Panel cut-out dimensions	68x68 mm
Weight	140g (approx.)

RELATED PRODUCT

CONTROLLER	
A56-AMF	AMF COMPACT

CRE TECHNOLOGY - 130, Allée Charles-Victor Naudin - Zone des Templiers - SOPHIA ANTIPOLIS - 06410 BIOT - FRANCE
Téléphone : + 33 (0)4.92.38.86.82 - www.cretechnology.com - info@cretechnology.com